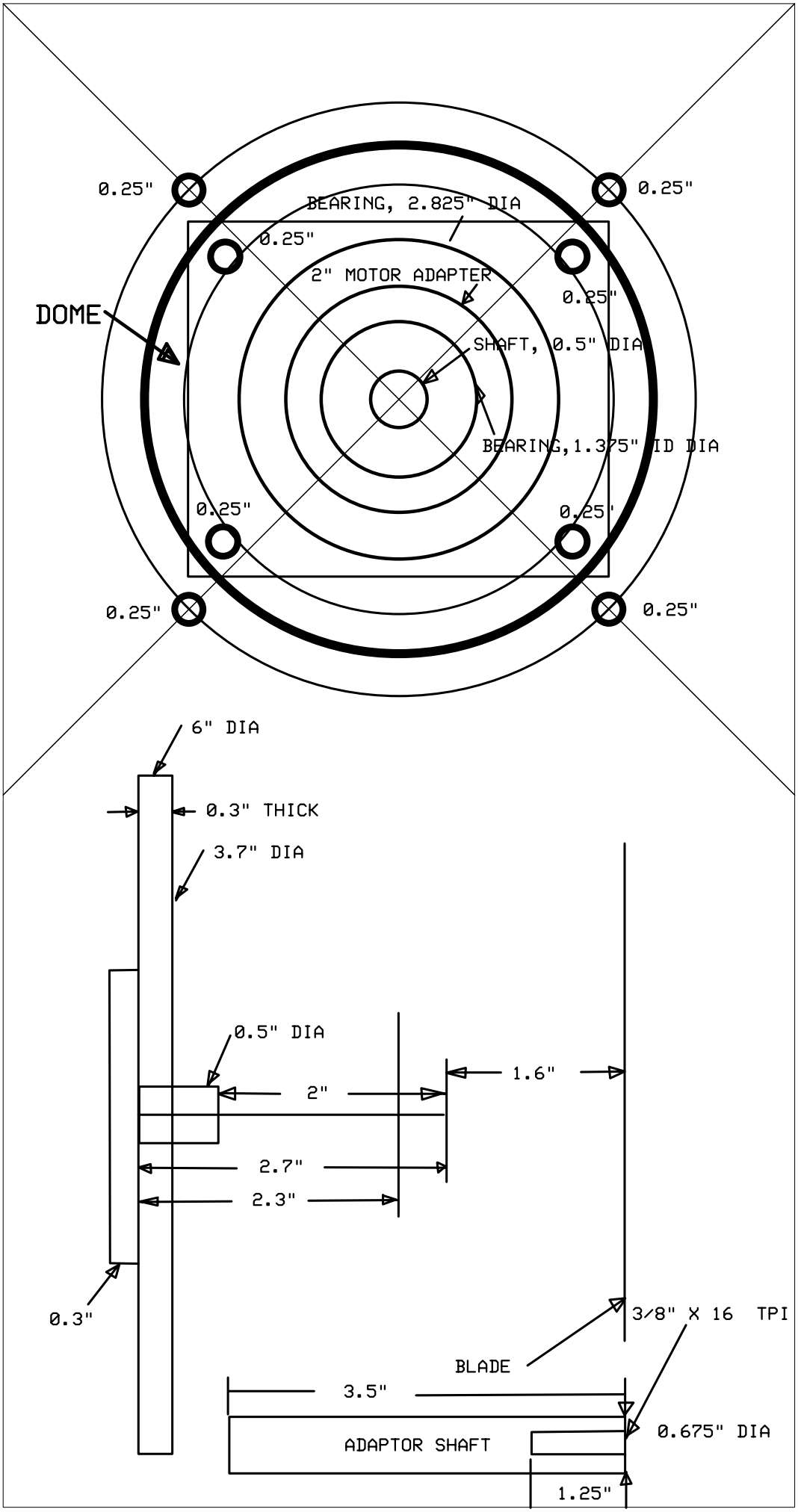

D:\rod\ev\Elec trak\etrakadtr1.pcb (Silkscreen & pads)